# Reproductive Counseling in Sickle Cell Disease

*Regina Amélia Lopes Pessoa de Aguiar*
*Faculdade de Medicina/Hospital das Clínicas*
*UFMG*

# Sickle Cell Disease

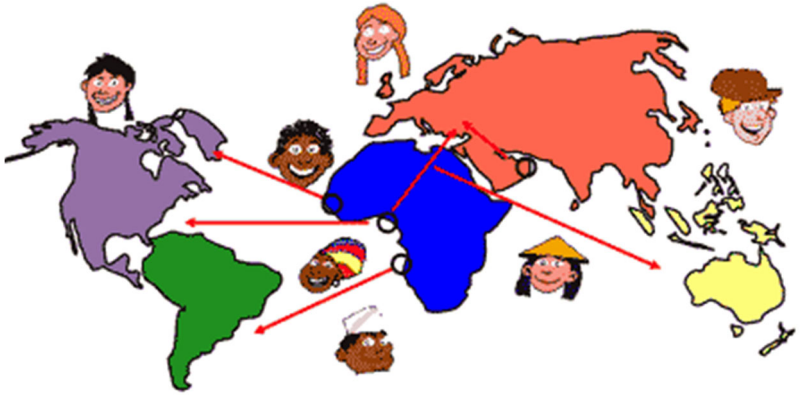

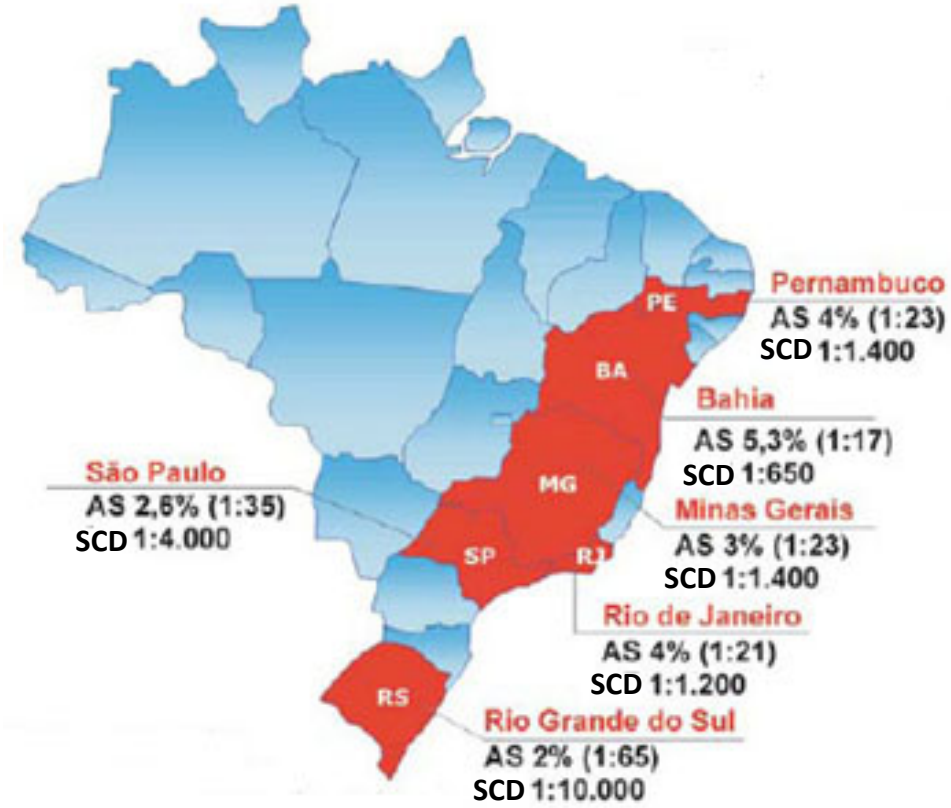

# Physical and sexual development

- The mean weight of children and adults with SS is subnormal
- The mean height is similar of AA controls
- Decreased interacromial (girdles pectoral) and intercrista diameters (pelvic girdles)
- The bone age is retarded
- The onset of puberty is usually delayed (SS disease and $S\beta^{o}$thalassaemia **>** SC disease and $S\beta^{+}$thalassaemia)

# *Fertility and SCD*

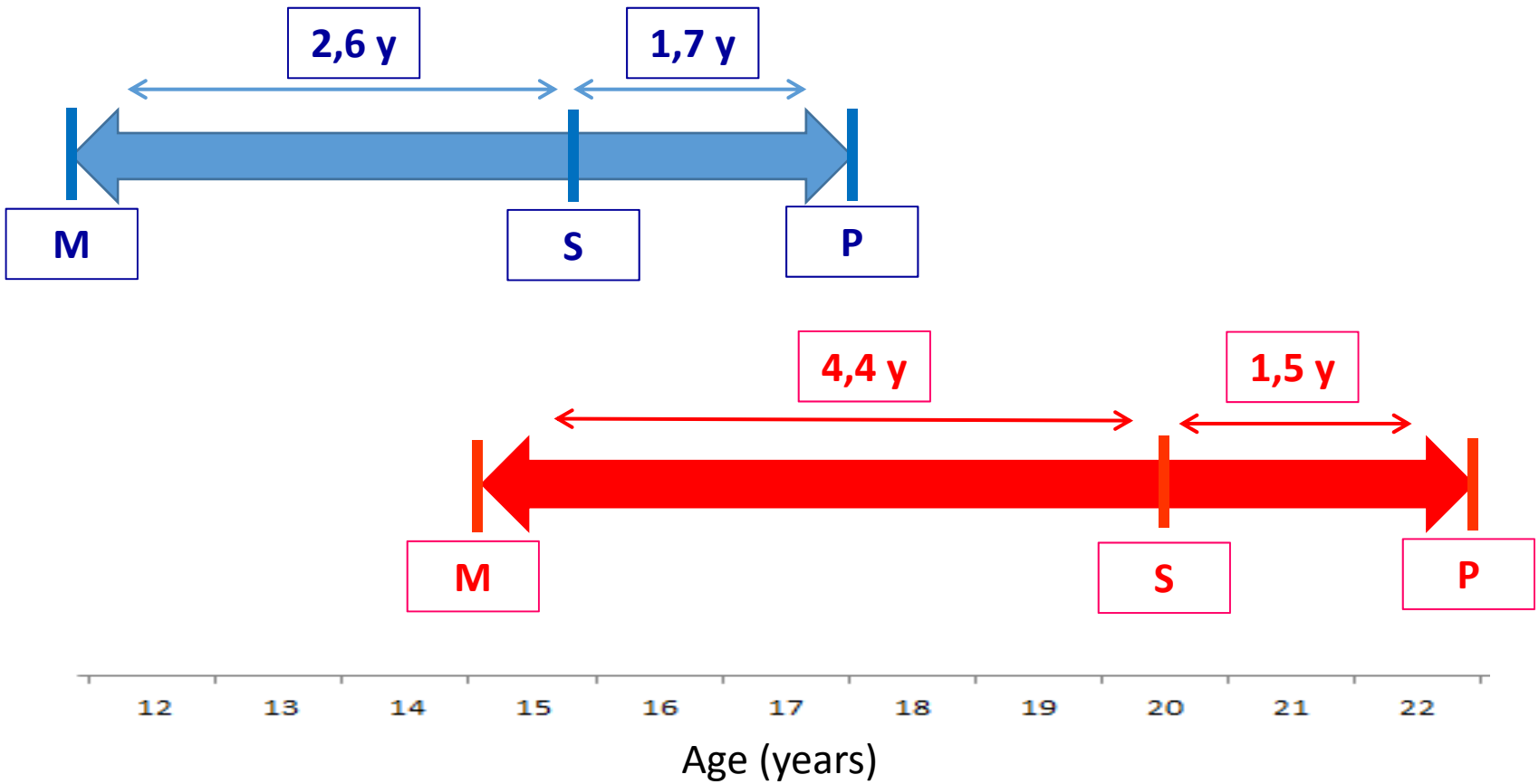


*Alleyne et al. 1981.*

# *SCD and Reproduction*

- Late menarche
  - Hb SS *(Bargir, 1994; Serjeant, 2005; Cardoso et al, 2012)*
- Increase of incidence of pregnancy
  - High prevalence of disease in our country
  - Increased expectancy/quality of life in women with hemoglobinopathies

**FERTILITY NOT AFFECTED**

# GENETIC COUNSELING

versus

# REPRODUCTIVE COUNSELING

# Genetic Counseling

*Process of communication that addresses human problems related to occurrence and recurrence risk of genetic disease in a family.*

*American Society of Human Geneteics, 1975.*

# Reproductive Counseling

*Assessment of the risks of pregnancy for women's health and health of the fetus.*

# Reproductive Counseling

**Grade of Recommendation A (WHO)**

**Best Practices and to be stimulated**

***"Not all individuals have the same chance of getting sick or dying"***

***INDIVIDUALIZED CARE***

WHO, 1997

# Reproductive Counseling

- Fully assess current status.
- Optimize the condition before pregnancy.
- Discuss how the pregnancy will adversely affect SCD.
- Discuss how the SCD will affect the pregnancy outcome.
- Discuss risk of transmission of disease to the child.
- Discuss optimal timing for conception with clear objectives before conception.
- Discuss importance of effective contraception until medical condition is optimal for pregnancy.
- Emphasize the need for partnership with the patient, early diagnosis of pregnancy, and early antenatal care.

# Reproductive Counseling

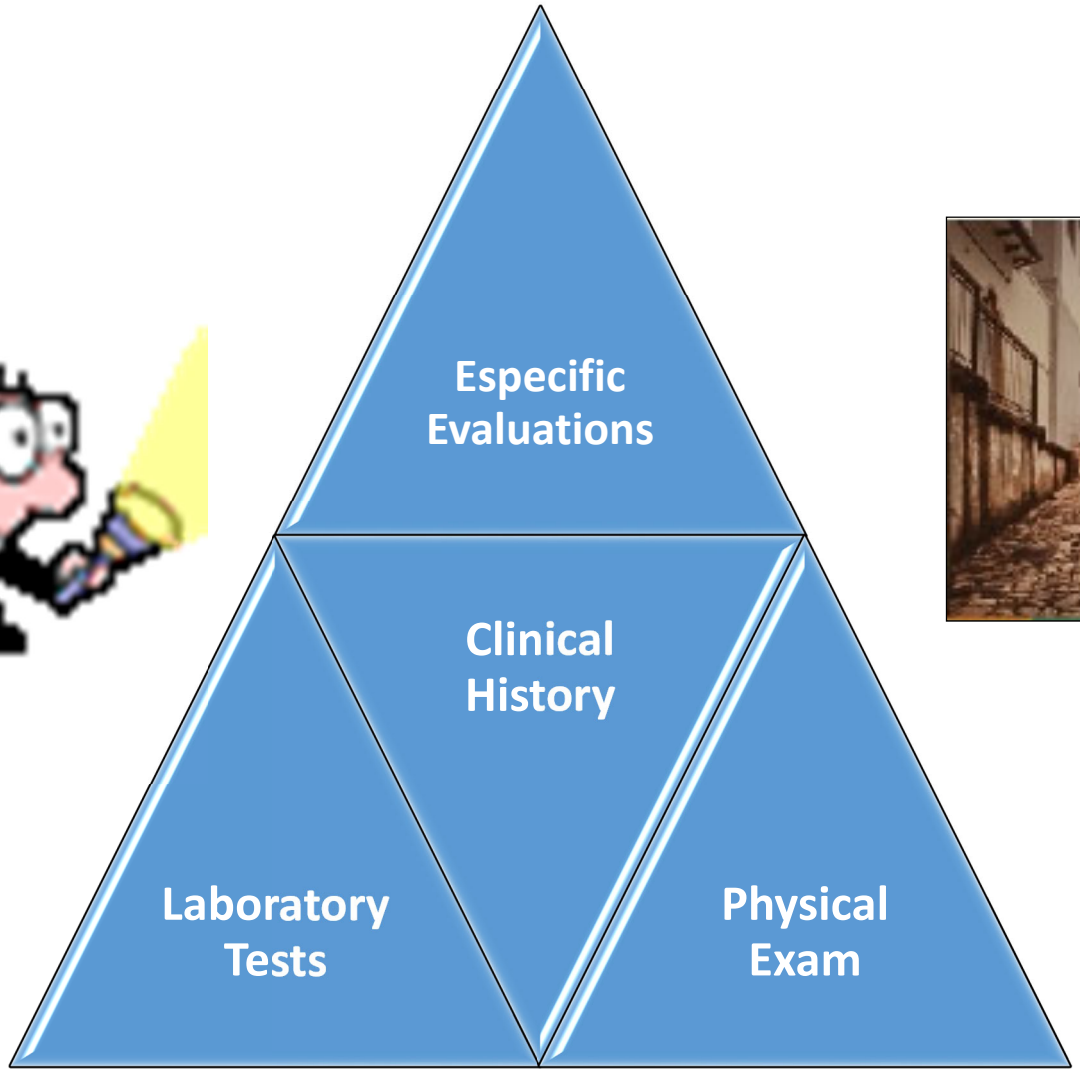

# Reproductive Counseling

- Nutrition status
  - Diet
  - BMI (Body mass index)
- Substance use
  - Tobacco
  - Alcohol
  - Illegal drugs
- Infectious diseases, included sexually transmitted disease
- Interval between births
- Occupation
- Hemoglobin electrophoresis partner

# Reproductive Counseling

- **Active Immunization**
  - Tetanus
  - Diphtheria
  - Rubella
  - Hepatitis B
  - Yellow fever
  - Pneumococcus
  - Meningococcus
  - Influenza
  - Pertussis

# Reproductive Counseling

- **Specific Monitoring**
  - CBC and reticulocytes
  - Creatinine, uric acid, AST, ALT, LDH, bilirubin, glycemia, electrolyte levels, albumin, zinc, ferritin
  - Serology: anti-HBs, HBsAg, Toxoplasmosis, CMV, HTLV, anti-HIV, anti-HCV, VDRL, Chagas
  - Urinalysis and urine culture, creatinine clearance and total protein (24 hours urine collection)
  - Echocardiography
  - Ophthalmologic examination
  - Indirect Coombs test e erythrocyte phenotyping

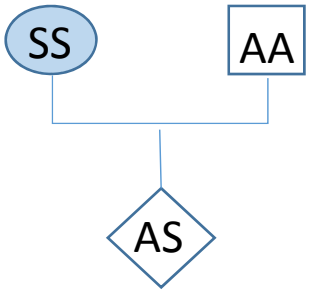
SS
AA
AS

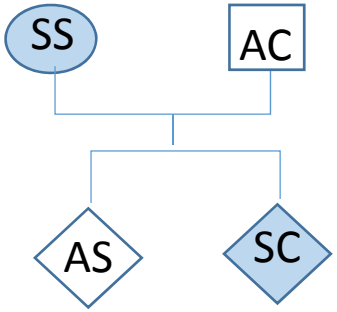
SS
AC
AS
SC

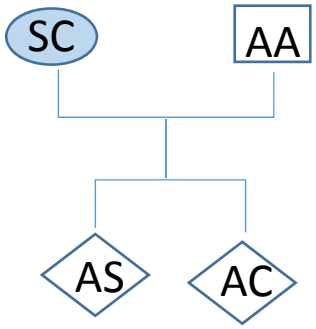
SC
AA
AS
AC

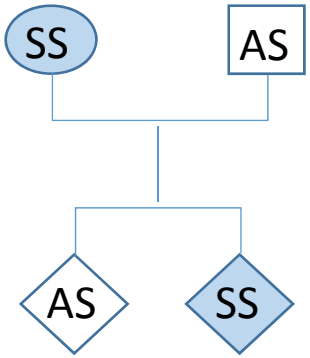
SS
AS
AS
SS

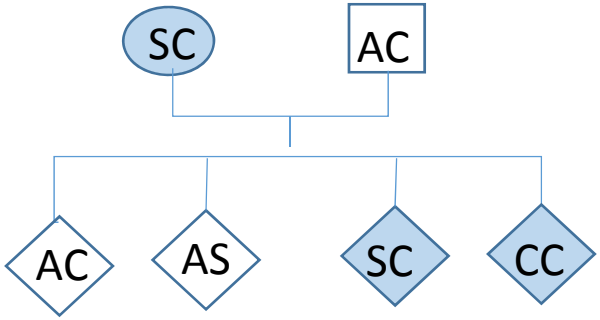
SC
AC
AC
AS
SC
CC

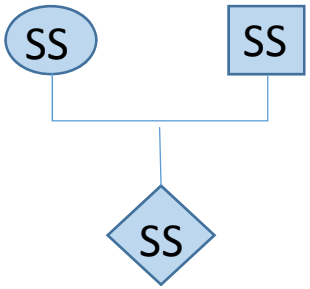
SS
SS
SS

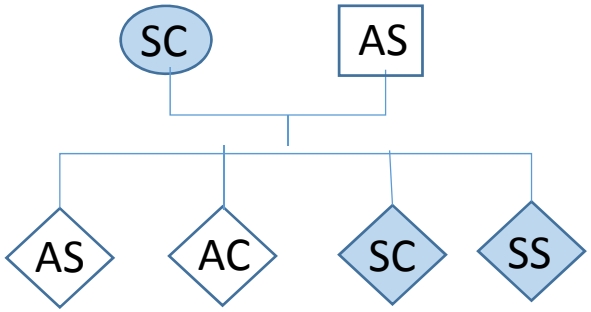
SC
AS
AS
AC
SC
SS

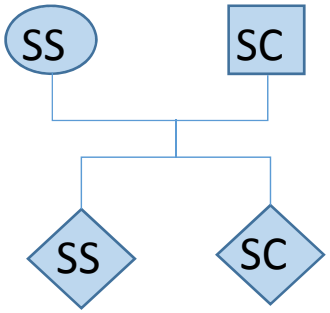
SS
SC
SS
SC

Is pregnancy possible?

When become pregnant?

Is pregnancy contraindicated?

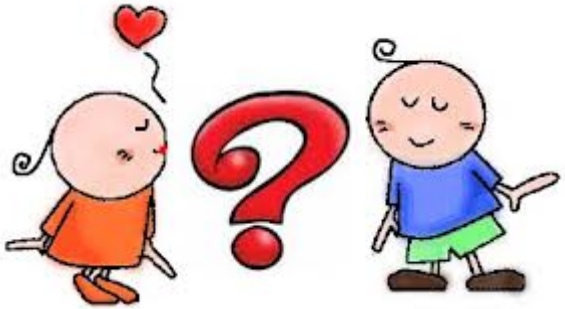

# CONTRACEPTION

# Contraception and Sickle Cell Disease

## Medical Eligibility Criteria

1. No restriction for the use of the contraceptive method.
2. The advantages of using the method generally outweigh the theoretical or proven risks.
3. The theoretical or proven risks usually outweigh the advantages of using the method.
4. Unacceptable health risk if the contraceptive method is used.

***Medical Eligibility Criteria for Contraceptive use. WHO, 2009.***

# Contraception and Sickle Cell Disease

| Method | WHO Category |
|---|---|
| Depot medroxyprogesterone acetate (DMPA) | 1 |
| Progestogen-only pills (POP) | 1 |
| Levonorgestrel-releasing IUD (LNG-IUD) | 1 |
| Levonorgestrel and etonogestrel implants (LNG/ETG) | 1 |
| Combined oral contraceptive (COC) | 2 |
| Combined injectable contraceptive (CIC) | 2 |
| Combined contraceptive vaginal ring (R) | 2 |
| Combined contraceptive patch (P) | 2 |
| Copper-bearing IUD (CU-IUD) | 2 |

***WHO, 2009.***

# Contraception and Sickle Cell Disease

| Group | Method | WHO category | Effectiveness Pregnancy / 100 women-year | |
|---|---|---|---|---|
| | | | Typical use | Perfect use |
| Always very effective | ▪Implants | 1 | 0,05 | 0,05 |
| | ▪Combined injectable | 2 | 3 | 0,05 |
| | ▪CU-IUD ** | 2 | 0,8 | 0,6 |
| | ▪LNG-IUD** | 1 | 0,2 | 0,2 |
| | ▪Male sterilization** | - | 0,15 | 0,10 |
| | ▪Female sterilization** | - | 0,5 | 0,5 |

# Contraception and Sickle Cell Disease

| Group | Method | WHO category | Effectiveness Pregnancy / 100 women-year | |
|---|---|---|---|---|
| | | | Typical use | Perfect use |
| Very effective | ▪LAM | 2 | 2 | 0,5 |
| | ▪COC | 2 | 8 | 0,3 |
| | ▪Patch and ring | 2 | 8 | 0,3 |
| | ▪POP | 1 | 8 | 0,3 |
| | ▪DMPA | 1 | 3 | 0,3 |

# Contraception and Sickle Cell Disease

| Group | Method | Effectiveness Pregnancy/100 women-year | |
|---|---|---|---|
| | | Typical use | Perfect use |
| Questionable efficacy | ○Male Condom | 15 | 2 |
| | ○Female Condom | 21 | 5 |
| | ○Diaphragm | 16 | 6 |
| | ○Fertility awareness-based methods | 25 | 3-5 |
| | ○Spermicides | 29 | 18 |

# Reproductive Rights

- Right of peoples to decide, in a free and responsible, whether or not they want to have children, how many children they want, and in that time of their lives.
- Right to information, means, methods and techniques to have or not have children.
- Right to exercise to sexuality and reproduction free of discrimination, imposition and violence.

***Ministry of Health - Brazil, 2006.***

dreminas
ASSOCIAÇÃO DE PESSOAS COM DOENÇA FALCIFORME E TALASSEMIA
DE BELO HORIZONTE E REGIÃO METROPOLITANA - APDFTBHRM

Doença Falciforme
Linha de Cuidados
na Atenção Primária à Saúde

Projeto
Aninha
Cuidando da Gestante
com Doença Falciforme
CEHMOB-MG

EAGAR-df
Encontro Acadêmico sobre Gestação
de Alto Risco em Doença Falciforme